Temporary GeoTrel™ MSE Retaining Wall System

Construction and Quality Control Manual

Version v2023.1

REINFORCED EARTH®

CONTENTS

PREFACE

This Construction and Quality Control Procedures Manual has been prepared as a guide in building Reinforced Earth® GeoTrel™ wire wall structures.

Its contents should be thoroughly reviewed by the Contractor and the superintendent responsible for construction prior to the delivery of Reinforced Earth materials to the job site.

The Reinforced Earth Company will provide construction advisors to assist the Contractor in the implementation of correct construction procedures. However, in the event of any conflict between the Plans, Specifications or Contract Documents and this Manual, the former will prevail. If there is any doubt with regard to any aspect of Reinforced Earth construction, contact The Reinforced Earth Company before commencing or continuing work.

Compliance with the guidelines in this Manual does not relieve the Contractor of the responsibility to adhere to the project Plans, Specifications and Contract Documents, or for complying with all safety standards and procedures, including fall protection, at the job site.

NON-DISCLOSURE NOTICE AND DISCLAIMER

1. This Document is the property of The Reinforced Earth Company (RECo) and contains information which is proprietary to The Reinforced Earth Company, including the patented process and techniques relating to mechanically stabilized earth (MSE) structures known as "Reinforced Earth" structures.

2. This Document is being made available solely for use in connection with your interest or participation in the proposed Reinforced Earth project, and for no other purpose.

3. Except as specified in paragraph 2 above you must not, without the prior express written consent of The Reinforced Earth Company, use any of the information contained in the Document whether to construct, design, manufacture, fabricate, assemble, produce or install, or otherwise utilize - or cause the same or any of them to be done - any elements of Reinforced Earth (whether or not patented), or special forms of equipment unique to the production, manufacture, fabrication, assembly, installation, or utilization of Reinforced Earth, or for any other purpose.

4. This Document and the information contained herein must not be copied or disclosed in any manner or form, in whole or in part, to any third party without the prior express written consent of The Reinforced Earth Company.

5. Receipt of Document gives no entitlement to any property right in the Document or in the information contained therein by virtue of the temporary supply of the Document in accordance herewith.

6. Reinforced Earth structures designed by The Reinforced Earth Company comprise or are based solely upon:

    a. The internal stability of the Reinforced Earth structure based upon the design assumptions noted on all RECo drawings relating to the structure and the external loads, surcharges and site geometries supplied by or on behalf of the Owner;

    b. The layout and geometry of the structure based upon survey details, plans and drawings supplied by or on behalf of the Owner; and

    c. The Job Specifications.

    The design does not include a check of the overall stability of the foundation soils below and behind the structure, or a check of any potential failure planes external to the structure, or a check of the stability of any permanent or temporary slopes above or below the wall or temporary excavations. Based on the completeness and accuracy of the above information used or relied upon in designing the structure, The Reinforced Earth Company is responsible for the internal stability of the structure only.

7. Upon demand, the Document and all copies thereof must be immediately surrendered and returned to The Reinforced Earth Company.

INTRODUCTION

Reinforced Earth® is a composite material formed by the association of a frictional soil and reinforcing strips and/or ladders. In concept, it is like reinforced concrete; that is, Reinforced Earth is an economical means of improving the mechanical properties of a basic material, earth, by reinforcing it with another.

Geotrel™ is a wire faced MSE wall system, using geosynthetic strip (GeoStrap®) soil reinforcements.

Stresses produced within the soil mass are resisted by the strips; stresses are transferred to the strips by friction.

A Reinforced Earth structure constructed using this material is shown as the "reinforced volume" in Figure 1. Wire facing panels and geotextile are used at the face of the reinforced volume to prevent erosion of the backfill.

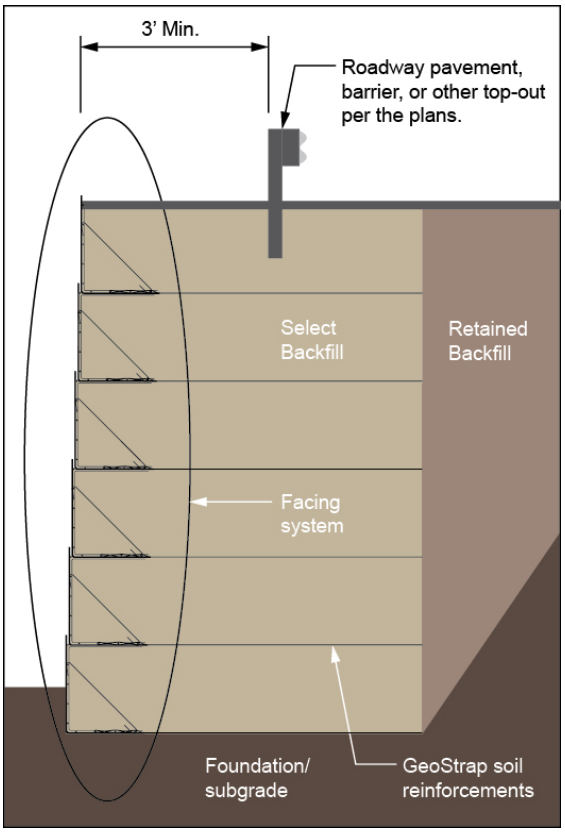

Figure 1: GeoTrel Typical wall section.

A. PURPOSE

This document is intended to provide the Owner, Contractor, Engineer, and the inspection staff - those who are responsible for overall quality control and inspection during construction - with the criteria necessary to monitor the erection of Reinforced Earth structures for compliance with the Plans, Specifications, and Contract Documents.

B. RESPONSIBILITIES

It is the Contractor's responsibility to complete construction in strict accordance with the Plans, Specifications, and Contract Documents. To assist the Contractor in this regard, The Reinforced Earth Company provides recommended erection procedures in the Procedures Manual. Nothing in this document is intended to relieve the Contractor of the responsibility of complying with all safety standards and procedures, including fall protection, at the job site.

It is the responsibility of the Geotechnical Engineer to determine and verify the global stability; bearing capacity; primary, secondary and differential settlement of the foundation soils.

The Contractor and Owner should verify that the Erecting Contractor's on-site personnel are in possession of and are familiar with the recommendations of this Procedures Manual.

Technical Advisors from The Reinforced Earth Company may assist the Contractor with material scheduling and coordination, and provide advice on the recommended construction procedures for Reinforced Earth structures as set out in this Manual. Technical Advisors are available on-site during initial construction and thereafter on a request basis.

Technical Advisors are not available on-site on a full-time basis, and are not provided with the intent of replacing the Owner's and Contractor's designated quality control and/or inspection staff.

Only the Engineer can enforce the requirements of the Plans, Specifications, and Contract Documents.

C. PLANS, SPECIFICATIONS, LAYOUT

1. Prior to commencing any site work, the Contractor should verify that the latest issue of the Plans, Specifications, and Contract Documents, approved for construction, are being used to build the Work.
2. The Contractor should also confirm that the Work is being constructed at the proper location by verifying line, grade, offset, and other location criteria.

D. WIRE FACE WALL COMPONENTS

GeoTrel structures consist of the following four components:

Wire Facing Panels

- 18” or 24” tall “Ln” panels are used for the majority of the structure. The subscript "n" in panel designations indicates the number of reinforcing strip and/or (hairpin) connections on each panel
- Field cut or bent panels (by contractor) as required by the geometry of the structure.

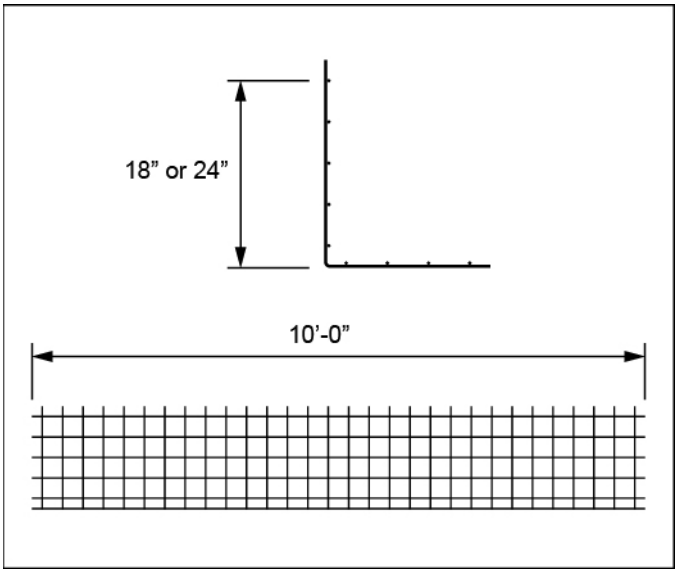

Figure 2: Facing panel section and elevation

Figure 3: Stacks of facing panels

Wire Struts

- 20” (for 18” L Baskets) and 26” (for 24” L Baskets) long wire struts.

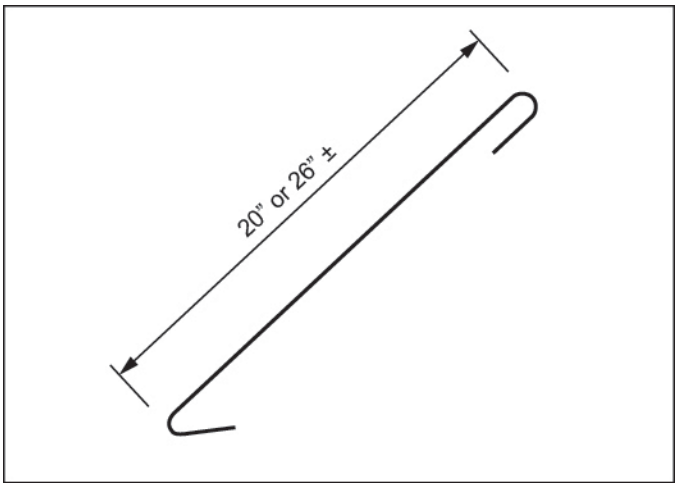

Figure 4: Wire strut

Geotextile

- Geotextile is placed directly behind the wire facing panels in order to prevent the loss of backfill through the 4” x 4” wire mesh facing.

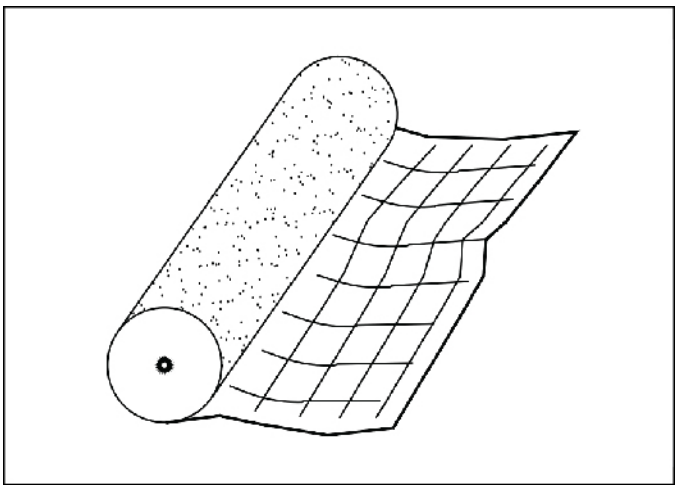

Figure 5: Roll of geotextile

GeoStrap Soil Reinforcements

- GeoStrap Reinforcing Strips - GeoStrap are typically supplied in a 50-mm (2.0 in.) width and varying lengths as required by the design of the structure.

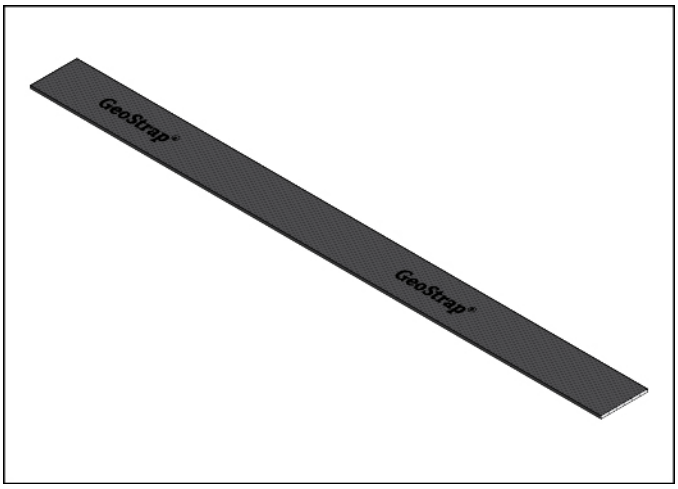

Figure 6: GeoStrap

Steel Wire Face Wall components {facing units, connection hardware (if required) and struts} may be uncoated steel for temporary applications.

Granular Backfill

Backfill conforming to Contract Specifications must be used within the reinforced volume.

E. MATERIALS AND SERVICES PROVIDED BY THE REINFORCED EARTH COMPANY

- Layout and internal stability design of the Reinforced Earth structure.
- Wire facing “L” panels.
- Wire struts.
- GeoStrap.
- Geotextile.
- Special connection hardware (if required in RECo plans).
- Delivery of Reinforced Earth Company-furnished materials to the site (F.O.B.), with two hours of time allowed for unloading.
- Initial on-site technical assistance.

GeoStrap, geotextile, and other special items provided by The Reinforced Earth Company are bundled and packed to minimize damage in unloading and handling.

Certificates of compliance with project specifications for all materials are furnished by The Reinforced Earth Company. However, it is the Contractor's responsibility to verify that all materials received at the job site are in accordance with shipping documents and project requirements. Any discrepancies should be reported immediately to The Reinforced Earth Company.

Materials should be thoroughly inspected upon delivery to the job site. Any damaged item should be set aside, and The Reinforced Earth Company notified immediately. Materials should be handled and stored to prevent damage or theft. GeoStrap and Geotextile must be stored in a sheltered location and protected from sunlight.

To prevent construction delays, the Contractor should continuously monitor the quantity of materials on hand to ensure an adequate supply consistent with the Plans, Specifications, and Contract Documents.

F. EQUIPMENT, WORK, MATERIALS AND TOOLS SUPPLIED BY CONTRACTOR

Equipment

- Wire Face Handling: 18” tall “L” wire facing panel weighs approximately 37 lbs.; 24” tall “L” wire facing panel weighs 45 lbs. Equipment to handle stacks of wire facing units shall be determined by the contractor.
- Backfilling - Dump trucks, scrapers, dozers, graders, front-end loaders, water trucks, etc. are used for hauling, dumping and spreading backfill (Specific equipment selection will depend on backfill, lift thickness, compaction specifications, etc.).
- Compaction - Large smooth-drum vibratory rollers are used for mass compaction of most backfills. Fine uniform sands are compacted using a smooth-drum static roller.
- Small walk-behind vibrating rollers or flat-plate compactors are needed for compaction within 3 ft. of the wire facing panels.

Summary of Work Performed by Contractor

- Site preparation including excavation and installation of drainage systems as required.
- Construction of the Reinforced Earth structure consisting of the erection and positioning of wire facing panels, geotextile and struts; placement, connection, tensioning and anchorage of reinforcing strips; and placement and compaction of Select Granular Backfill.
- Design and installation of fall protection systems.

Materials and Tools Supplied by Contractor

- Nylon slings for unloading panels.
- Four-foot carpenter level.
- Two-foot level.
- Claw hammers and nails.
- Chalk line or string line.
- A plumb bob
- Survey equipment
- Tie wire
- Lumber for wall alignment guides
- Lumber and stakes for tensioning GeoStrap
- Fall Protection

HANDLING REINFORCED EARTH MATERIALS

A. WIRE FACING PANELS

Panel delivery: Prior to the start of construction, the Contractor should establish a facing panel delivery schedule which will allow The Reinforced Earth Company's operations group to match its facing manufacturing/delivery output to the Contractor's construction schedule.

Wire facing panels (also referred to as L-baskets) are usually delivered on flatbed trailers in bundles of 50 panels each. The delivery point is made as close to the structure as a truck can be driven under its own power.

Unloading facing panels: Under normal conditions, a two-hour period is allowed per delivery for panel unloading. In this time, panels may be temporarily stacked by using slings or forklifts to lift and handle individual bundles of panels.

Care must be taken to protect facing panels from damage during handling and storage.

Panels can be stored at the job site by re-stacking. Select a location with firm, level ground. Carefully lift and place each panel bundle on the dunnage. Panels should be securely set and blocked on firm, level ground to prevent damage.

B. GEOSTRAP, GEOTEXTILE & WIRE STRUTS

GeoStrap Soil Reinforcements: GeoStrap are delivered to the site in rolls. A tensile strength is marked directly on the GeoStrap. Storage in the open is acceptable but rolls should be covered with tarps, placed on pallets and not be placed directly on the ground.

Geotextile: Geotextile is supplied in 36-inch-wide (or 48-inch-wide) rolls. In addition to normal security, Geotextile must be stored in a sheltered location, protected from sunlight.

Wire Struts:

- 1'-8"+/- (for 18" L Baskets) and 2'-2"+/- (for 24" L Baskets) long wire struts are supplied in wooden crates.

GEOTREL WALL CONSTRUCTION

BASIC CONSTRUCTION SEQUENCE

The finished appearance and function of a Reinforced Earth structure depends to a large extent on the care taken in erecting and positioning facing panels. For this reason, particular attention must be paid to the initial course of facing panels and to backfill placement. Close attention to detail and accuracy at this point will help ensure trouble-free and rapid construction of the remainder of the structure.

The basic construction sequence for a GeoTrel structure can be summarized in these steps:

- Prepare the site including excavation, proof-rolling and installation of drainage systems if required.
- Survey and stake out wall location, noting that the bottom of wall line and top of wall line are often different due to wire basket set back at each course.
- Set the initial course of wire facing panels which consists of Type "L" wire facing panels.
- Place 36" or 48" wide geotextile at lowest lift.
- Install wire struts as shown in plans
- Install GeoStrap by wrapping around the lower leg of wire facing (see Figure 9).
- Tension and anchor GeoStrap.
- Spread and compact backfill in lifts (10" max) up to the level of the top horizontal wire of the L-basket.
- Where required by plans, Connect reinforcing strips to hairpin connectors or Horseshoe connectors.
- Place backfill on top of the strips to anchor them adequately so the void under the strips behind the facing can be filled and compacted.
- Set the next level of facing as required (with a 1/2" overlap with lower facing unit) and tie wire the lower portion of second facing to adjacent lower facings.
- Place 36" or 48" wide geotextile at next lift.
- Place Struts as shown in plans.
- Tension and anchor GeoStrap.
- Repeat cycle of backfilling and compacting in lifts, connecting GeoStrap, setting panels, struts and geotextile until the design height is reached.

Refer to the following flyer for additional information and visuals for the basic construction procedure:

GeoTrel™ Construction Procedure

This is an abbreviated guide to constructing a GeoTrel™ wire-faced retaining wall with GeoStrap® soil reinforcements. Refer to our construction manual for complete procedure handling of materials and recommended safety precautions.

Preparation of base and first L-basket:

Place the L-baskets with overlap at the vertical joints to achieve the dimension shown on elevation drawing.

Tie wire at all overlap locations.

Installation of the first GeoStrap course:

Weave GeoStrap through the L-basket to secure it in place.

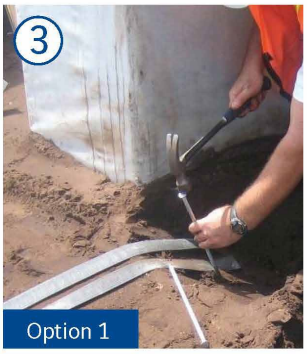

Anchoring the GeoStraps:

Pull the strap perpendicular to the panel face such that there is no slack remaining.

Anchor the strap to prevent movement during the backfill operation, using one of the following two options:

Option 1: Dig a 6 in. x 6 in. hole within 2 feet of the end of the design length of the GeoStrap. Lay the strap flat on the backfill and secure the end of the strap with a nail or stake, then fill the hole and top of strap with select backfill.

Option 2: Secure the end of the strap to a piece of lumber with a small nail or staple. Anchor the lumber to the ground with a piece of rebar.

Place the 36″ geotextile along the back face of the wire wall.

A. Install struts at locations on panel details. Struts shall be placed diagonally across one horizontal grid to maintain vertical position of facing.

B. One strut must be placed at each overlapping panel joint, where the strut crosses over from one basket to the next.

C. At locations where the wall alignment creates a 90° corner, one L-basket shall be turned vertically and placed on the inside of the horizontal panels. One strut shall be placed horizontally from one basket to the other at the corner, as shown above.

Place the backfill on the end of the GeoStraps so they will remain in place during backfilling.

Spread and compact the backfill in 10 in. lifts up to top of the last horizontal wire. Begin at the end of the GeoStraps to ensure the strap is tight before continuing to the back face of wire wall.

Place the next panel course slightly behind the panel below.

Repeat the cycle of placing L-baskets, GeoStraps, geotextile, and struts, then backfilling and compacting in lifts until the final wall design height is reached.

Compaction Equipment:

Flat plate tamper:
Within 3 feet of wall face

Large Roller:
Keep 3 feet away from wall face

ALIGNMENT PROCEDURES

The following panel position and alignment procedures should be reviewed prior to the start of construction.

The horizontal and vertical alignment of base course L baskets shall be set by survey layout.

Improperly placed base panels can result in subsequent panel misalignment and decreased wall construction productivity.

Lifting, placing and spacing panels: Panels can be lifted from the horizontal or stacked position, directly to a vertical position by one individual. For straight walls, the vertical wires shall have an overlap with adjacent horizontal panels of 2-inches. For walls on a curved alignment, the overlap will vary depending on the radius. See the plans for more information.

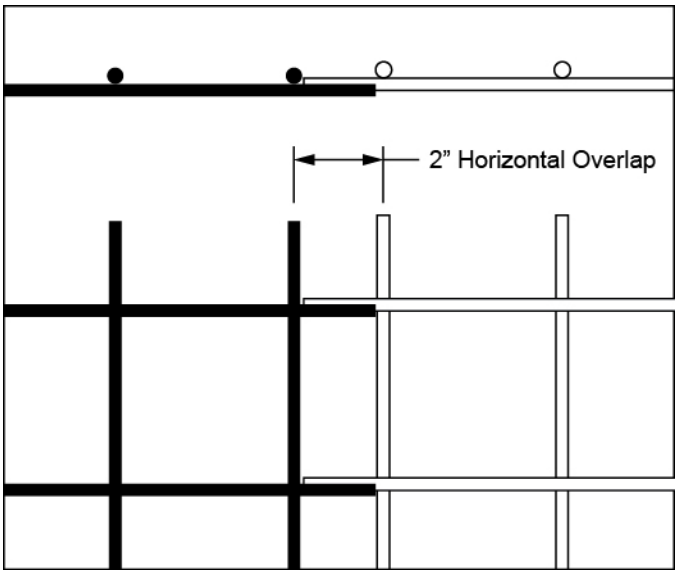

Figure 7: Panel facing overlap of vertical joint (plan and elevation shown).

Check alignment: Visually check the alignment of each panel in relation to the control line on the initial course of panels or to the panel below in subsequent courses.

Care should be taken to ensure that the panel remains centered and properly located until it has been aligned, and tie-wired to adjacent panels.

Check horizontal level: The horizontal level of each panel should be checked and adjusted in order to assure a uniform appearance and even joints throughout the structure.

Use a stringline level to verify that the new panel is level. Then sight back along the tops of the panels to ensure that the new panel is at the elevation of the others in its course.

The first course of panels may be designed to follow a sloped subgrade. Under this condition, the second course and subsequent courses should be installed level. Refer to the project drawings for more information.

Set batter: L-baskets are offset at each course (typically about 3/8") and as such a built-in batter equal to the offset is provided. Struts are installed such that the verticality of each L-basket is achieved.

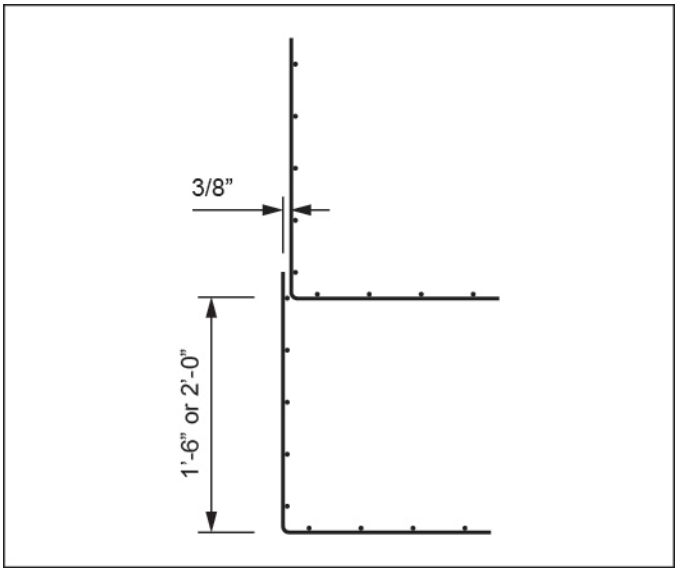

Figure 8: Section view showing panel batter/offset. Not all parts shown here, for clarity.

Monitor the actual movement of panels during the placement and compaction of each lift of backfill and adjust the amount of batter according to field conditions.

Vertical Alignment Check: During construction, check the overall verticality of the structure daily using a plumb bob.

ERECTION TOLERANCES

The overall vertical alignment tolerance, or plumbness, from top to bottom of the structure, as well as the horizontal alignment tolerance, should be in accordance with the contract documents.

If no alignment tolerances are provided in the contract plans, refer to the following general guidance:

For temporary wire face walls:

- Vertical and horizontal alignment of the wall face shall not vary by more than three (3) inches when measured along a 10-foot straightedge, or as shown in the plans and specifications.
- The overall vertical tolerance (plumbness) of the wall shall not exceed one and one half (1 ½") inch per 10 feet of wall height.
- The offset limit between consecutive rows of facing shall not exceed one and one half (1 ½") inch from planned offset.

Note that some level of bulging of wire facing is acceptable depending on the specifications of the wire wall (temporary vs permanent, with or without cast in place facing, etc). Critical structures with low bulging tolerances should be addressed by contractors means and methods, including choice of backfill behind facing units.

Vertical and horizontal alignment should be checked at every course throughout the erection process. Corrective action should be taken immediately when any of the specified tolerances are exceeded.

DETAILED CONSTRUCTION PROCEDURE

A. FOUNDATION PREPARATION

STEP A-1, *Excavation:* Excavate the site to the depth and width specified on the Plans for the length of the section to be built. Remove all unsuitable material and replace it, as necessary, with compacted fill as directed by the Engineer. If required by the Specifications and as directed by the Engineer, proof-roll the foundation to a density suitable for the bearing pressure shown on the Plans.

In the event of an over-excavation of the sub-grade, the gradation, placement, and compaction of replacement material must be approved by the Engineer.

Note: It's very important the grade is properly prepared, compacted and offers a level starting grade for the placement of the bottom L-panels since this establishes the alignment for future lifts.

Evaluation and approval of foundation suitability is the responsibility of the Engineer. Any foundation soils found to be unsuitable shall be removed and replaced with material approved by the Engineer. The material shall then be compacted, as directed by the Engineer, to a density suitable for the applied bearing pressure as shown on the Plans, Specifications, and Contract Documents.

Foundation evaluation and control are critical; the behavior and performance of a Reinforced Earth structure is largely dependent upon the foundation on which the reinforced volume is placed.

STEP A-2, *Drainage System(s):* Install drainage systems as required by the Plans and Specifications or as directed by the Engineer.

B. ERECTING THE INITIAL COURSE OF WALL FACING

STEP B-1, *Wire Facing Placement:* Wire facing layout usually begins at the lowest wall elevation. Set the first course of L-baskets directly on the prepared subgrade (follow slope or bottom of wall elevation shown on wall elevation drawing sheets).

Overlap each L-basket 2 inches horizontally (or along slope) as shown in *Alignment Procedures.*

For walls on a curved alignment, the overlap will vary depending on the radius. See plans for more information.

STEP B-2: Tie-wire each L-basket securely to the adjacent L-basket previously set.

STEP B-3: Continue setting panels in this manner and site back along the tops of the panels to ensure that each new panel is at the elevation shown in the plans.

STEP B-4: After ten panels have been set, recheck the wall's alignment by sighting along the wall face. Adjust panels if needed to obtain the alignment shown in the plans.

C. PLACEMENT OF GEOTEXTILE

STEP C-1: Geotextile prevents the loss of backfill particles while allowing the wall facing to be free draining. It is placed directly behind the wire panels. Place the geotextile as shown, with the excess folded over the front face of the panel until the next panel course is ready to be set.

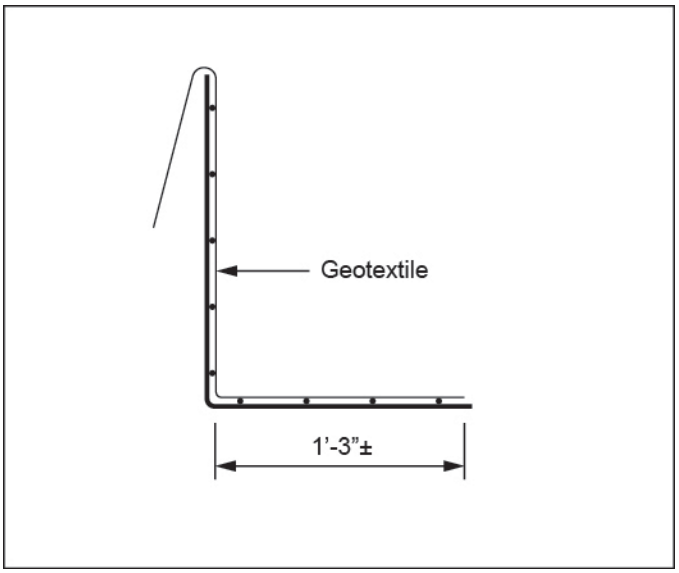

Figure 9: L-basket section showing placement of geotextile.

D. PLACEMENT OF STRUTS

STEP D-1: Install struts in accordance with the details shown within the construction plans. It's important they are installed in a manner where the struts are engaged and to permit the facing to move to vertical plumb position once backfilled.

Struts shall be placed by connecting to the bottom horizontal leg first as shown in the detail and snug fitting to the vertical face by crossing horizontally one or two square grids as shown below. Cut a small slit in the geotextile to allow for connection to the L-basket.

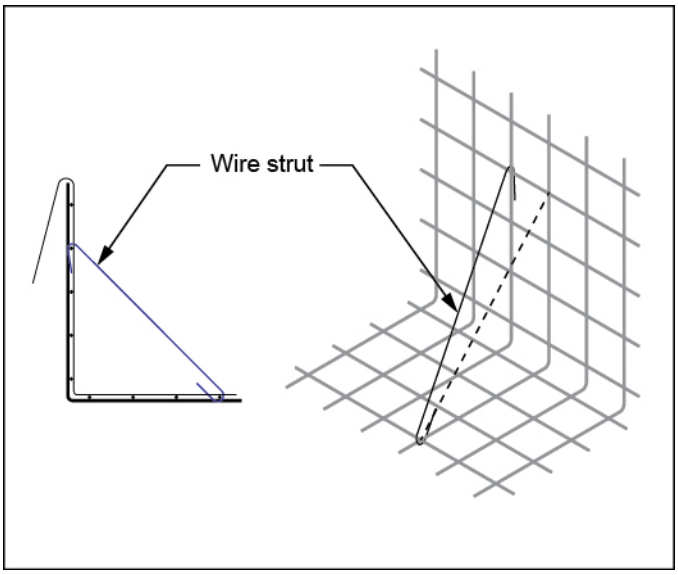

Figure 10: Wire strut placement

The placement and positioning of the struts shall be consistent with the construction plans. It's important they are installed in a manner to permit the facing batter to move to plumb once backfilled while engaging the strut fully.

E. PLACEMENT OF SOIL REINFORCEMENTS (GEOSTRAP)

STEP E-1: Cut the GeoStrap from the roll to twice the length of the design length shown on the plans.

STEP E-2: Install the proper number of GeoStrap on each L-basket according to the plans. A GeoStrap is installed by wrapping it around the lower leg of the L-basket, as shown below:

Figure 11: Top view of GeoStrap installed on L-basket

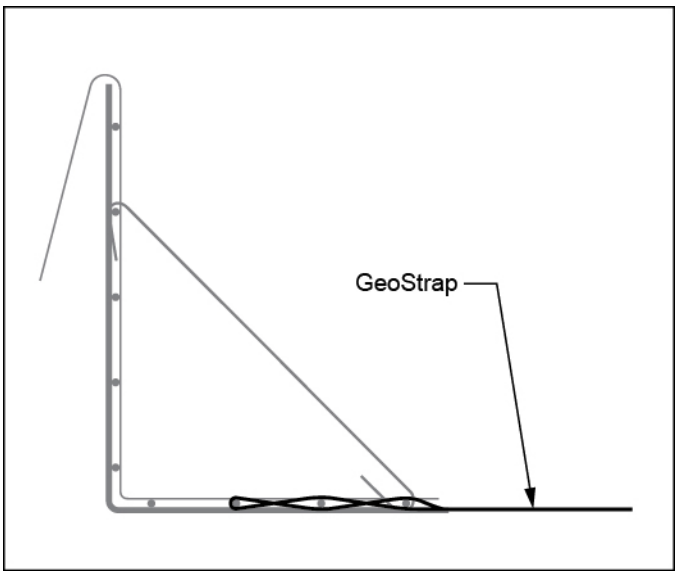

Figure 12: Section view of GeoStrap installed on L-basket

STEP E-3: Tension and anchor the GeoStrap to ensure they engage with the soil and do not move out of place during the backfilling and compaction process.

Tensioning: Pull the ends of the GeoStrap perpendicular to and away from the wall facing.

Anchoring: There are two recommended methods for anchoring the GeoStrap after they have been tensioned:

Option 1: Dig a 6 inch x 6 inch hole within 2 feet of the end of the design length of the GeoStrap. Lay the GeoStrap flat on the backfill and secure the end of the strap with a nail or stake. Fill the hole and top of strap with select backfill.

Figure 13: Securing the end of a GeoStrap in a hole with a stake.

Option 2: Secure the end of the GeoStrap to a piece of lumber with a small nail or staple. Anchor the lumber to the ground with a piece of rebar.

Figure 14: GeoStrap tensioned and secured to pieces of lumber.

Figure 15: Lumber is held in place with a piece of rebar.

F. BACKFILLING

The constructability and performance of a Reinforced Earth structure are directly related to the quality of the Select Granular Backfill and to the manner in which it is installed.

Select Granular Backfill material to be used in the reinforced volume must strictly conform to the Specifications. Material which does not conform cannot be used as Select Granular Backfill.

Prior to placing the Select Granular Backfill, the Contractor shall certify to the Engineer that the material conforms to the requirements stated in the Plans, Specifications, and Contract Documents for Reinforced Earth structures.

F-1: Placement: Place and compact select backfill in lifts (10” max) up to the level of the bottom of the next course of L-baskets.

Note that to avoid pushing the panels out of alignment, the initial lift of backfill are neither placed nor compacted against the back of the panels until a lift of fill is placed above the soil reinforcement.

Only after the first layer of reinforcing strips have been connected to the panel and a lift of backfill placed and compacted over the strips - can backfill then be placed and compacted against the back of the panels.

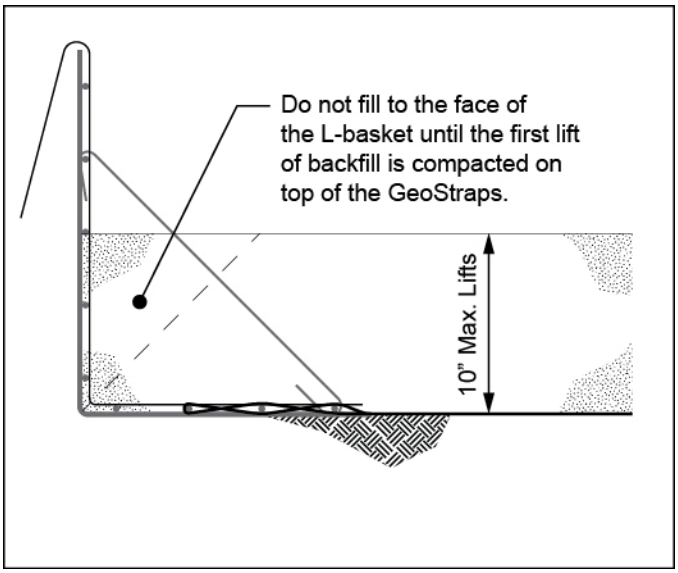

Figure 16: First lift of select backfill.

The gradation of the Select Granular Backfill should be tested periodically during construction to assure compliance with the Specifications. This gradation testing should be performed as per the specifications (typically at least once for every 2,000 cubic yards of material placed) and/or whenever the appearance or behavior of the material noticeably changes.

Metal tracks of earthmoving equipment must never come in contact with the GeoStrap. Rubber-tired vehicles, however, can operate directly on the exposed GeoStrap if backfill conditions permit and care is exercised.

Immediate gradation and moisture testing is required if backfill pumping occurs during construction.

F-2: Compaction*:* Large smooth-drum vibratory rollers are used to accomplish mass compaction of Select Granular Backfill materials, except for fine uniform sands.

Compact each backfill lift using a large **smooth-drum vibratory roller.** Fine uniform sands which contain more than 60 percent passing a No. 40 sieve used for Select Granular Backfill must be compacted using a **smooth-drum static roller.**

Sheep foot Rollers should not be used for compaction of Select Granular Backfill.

Vibratory compaction equipment should not be used to compact fine uniform sands.

Within a 3 ft. zone from the back of the panels, compaction must be performed using a small single or double drum walk-behind vibratory rollers or a walk-behind vibrating plate compactor (no jumping jack compactors). Testing compaction in this zone is not required.

At a minimum, Select Granular Backfill material must be compacted to 95% of maximum density, per AASHTO T- 99, methods C or D (with oversize correction as outlined in Note 7).

Placement moisture content of Select Granular Backfill material should be 1% to 2% less than the optimum moisture content.

After each lift, check the wall alignment visually and with a level. Adjust panels as necessary.

If 30% of the Select Granular Backfill material is greater than 3/4 in. in size, AASHTO T-99 is not applicable. For such material, the acceptance criterion for compaction is either a minimum of 70% of the Relative Density of the material as determined by ASTM D-4253 and D-4254, or a Method Specification based on a test compaction section which defines the type of equipment, lift thickness, number of passes of the specified equipment and placement moisture content.

The minimum frequency of compaction testing shall be one test per lift of Select Granular Backfill material placed. Test locations are determined by the Engineer.

F-3: Grading: At the end of each day's work, backfill must be graded to slope away from the back of the panels to divert water runoff from the structure area.

Failure to properly grade the backfill can result in excessive water in the Select Granular Backfill and cause subsequent movement of the panels beyond alignment tolerances.

G. CONSTRUCTING SECOND AND SUBSEQUENT COURSES

STEP G-1: Only after the backfill has reached the top of the L-baskets can construction of the second course begin. Throughout construction, panels should only be set after backfilling and compaction to grade have been completed.

STEP G-2: Position the front face of the next course of L-basket directly behind the back face of the lower L-basket wires. Place the upper L-basket immediately adjacent to the extending vertical wires from below, with horizontal and vertical alignment tolerances described in *Alignment Procedures.*

Follow the steps in Part B to install the entire next course of L-baskets.

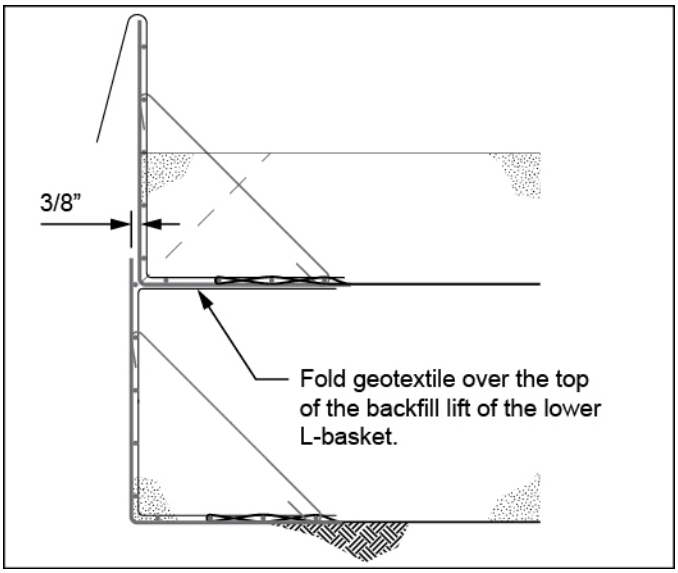

Figure 17: Second and subsequent courses of facing.

STEP G-3: Install the geotextile as described in Part C.

STEP G-4: Install the struts as described in Part D.

STEP G-5: Place GeoStrap as described in Part E.

STEP G-6: Backfill as described in Part F to the level of the bottom of the next course of L-baskets.

Unless otherwise indicated in the Plans or Specifications, quality control requirements for

Select Granular Backfill - including density and placement moisture content - are the same for the second and subsequent courses as described for the first course.

STEP G-7: Install Fall Protection as per Contractor Design.

STEP G-8: Visually check the wall alignment and if baskets are out of plumb or bulging excessively, adjust construction methods to achieve acceptable alignment.

It is important that all final lifts to the top of the respective L-basket and prior to the placement of the next L-panel course, the grade is well compacted and level to facilitate the continuance of proper overall alignment.

See Condition-Cause Relationships at the end of this manual for more information.

Repeat the steps in Part G. Follow the same procedures for the subsequent L-basket courses until the final course of L-baskets is ready to be completed.

H. COMPLETION OF THE WALL

STEP H-1: In placing the top course of panels, the construction sequence continues as previously outlined. However, top course panels may be field cut or nested within the lower course to meet finished-elevation requirements. Refer to the Plans and Specifications for details.

STEP H-2: If required, grade and install the top of wall treatment such as guardrails, geomembranes and barrier slab.

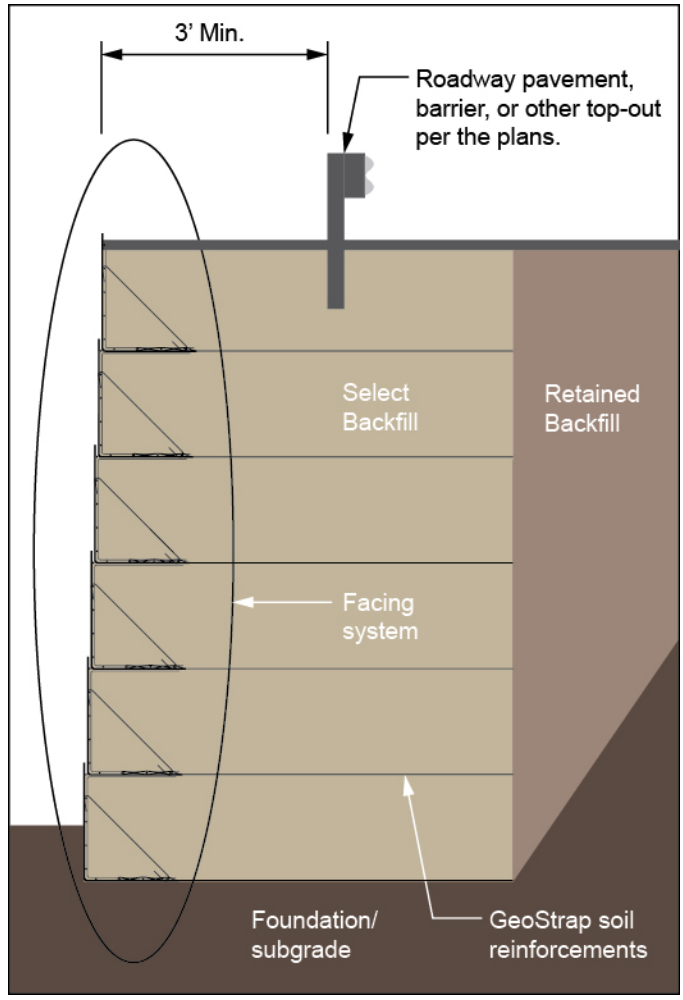

Figure 18: Typical section of a completed GeoTrel wall.

CONDITION-CAUSE RELATIONSHIPS

Reinforced Earth structures are to be erected in strict compliance with the structural and aesthetic requirements of the Plans, Specifications, and Contract Documents. The desired results can be achieved through the use of quality materials, correct construction procedures, and proper inspection. However, considering the nature of construction work, there may be occasions when dimensional tolerances and/or aesthetic limits are exceeded. Corrective measures must be taken immediately to return the structure to acceptable tolerances.

Below are several examples of these condition-cause relationships:

Condition	Cause
1. Distortion in the wall. a. Differential settlement or low spot in the wall b. Overall wall leaning	The foundation (subgrade) material is too weak or wet for proper bearing. If fill material, poor quality or improper compaction.
2. First course is difficult to set and/or maintain level.	Base course is not within elevation tolerance.
3. Wall is leaning out; Wire face is bulging.	a) Large backfill placing and/or compaction equipment working within 3-ft. zone of the back of the wall. b) Backfill material placed wet of optimum moisture content. c) Backfill contains excessive fine materials (beyond the Specifications for percent of materials passing a No. 200 sieve). d) Inadequate tensioning/anchoring of GeoStrap. e) Backfill material pushed against the back of wall before being compacted on the GeoStrap. f) Excessive or vibratory compaction on uniform fine sand (more than 60% passing a No. 40 sieve). g) Backfill material dumped close to free end of GeoStrap, then spread toward back of wall, causing bulge in GeoStrap and pushing panel out. h) Excessive compaction effort. i) Excessive lift thickness. j) Plasticity Index (PI) of backfill material is in excess of Specification limits. k) Backfill is saturated (heavy rain or improper grading of backfill after each day's operation.
4. Wall is leaning in.	a) Excessive batter set in panels for select granular backfill being used. b) Inadequate compaction of backfill. c) Differential settlement of foundation soils.

GLOSSARY OF TERMS

Agency: The person(s), firm, or corporation acting as Agent for the Owner.

Contract Documents: The Owner-Contract agreement, including the conditions of the Contract (general, supplementary, and other conditions), the drawings, Specifications and the provisions of the agreement between the Contractor and The Reinforced Earth Company; and also including all addenda issued prior to execution of the Contract, all modifications thereto and any other items specifically stipulated as being included in the Contract Documents.

Contractor: The individual, firm, or corporation undertaking the execution of the Work under the terms of the Contract, and acting directly through its Agents or employees.

Engineer: The person(s) designated by the Owner, as having authoritative charge over certain specific engineering operations and duties.

Inspector: The authorized representative assigned to make a detailed inspection of any or all portions of the Work or materials thereof on the Owner's behalf.

Owner: The Owner of a project. The agency, person, fi rm, or corporation with which a Contract has been made for the payment of the Work performed under the Contract.

Plans: The official approved plans, profiles, typical cross-sections, working drawings, and supplemental drawings, or exact reproductions thereof, which show the locations, character, dimensions and details of the Work to be performed.

Specifications: A description, for contract purposes, of the materials and workmanship required in a structure(s), as also shown on the related working drawings. The written material containing the standard provisions and special provisions, as may be necessary, pertaining to the quantities and qualities of materials to be furnished under the Contract.

Technical Advisor: Representative of The Reinforced Earth Company or licensed precaster who may be available to assist the Contractor with material scheduling and coordination, and give advice on the recommended construction procedures applicable to The Reinforced Earth Company's structures as set out in this manual.

Work: The entire scope of the Work to be performed at the site of the construction project including labor, materials, equipment, transportation and such other facilities as are necessary to fulfill all obligations under the Contract.

SAFETY TIPS FOR UNLOADING REINFORCED EARTH PRODUCTS

1. Upon arrival of truck, examine the load for any shifting or unstable conditions prior to removing tie downs.
2. The truck should be on level ground when unloading. Unloading on unlevel ground could result in shifting of precast units or possibly precast units falling from trailer.
3. Lifting equipment (straps, cables, ring clutches, etc.) should be checked for excessive wear or cracking prior to unloading truck.
4. Do not move the tractor while the product is not tied down.
5. If drivers are required to remove chains or binders next to lane of moving traffic, cones and flagman should be used to direct traffic away from the trailer and driver.
6. Drivers are not trained as riggers or swampers and should stay in cab or clear away from unloading operations. The drivers are acting in a delivery capacity only.
7. Personal protective equipment required by the general contractor on site should also be required of delivery drivers.
8. Personnel should not be allowed under a suspended load.
9. Once removed from the trailer, precast units not placed directly on the wall should be stacked or secured on fl at ground to prevent tipping or falling.
10. Areas between the truck and crane should be restricted to personnel required to unload the trailer.
11. If any unsafe situations exist while loading or unloading RECo products, contact The Reinforced Earth Company immediately to eliminate any hazards or exposure to illness or injury.

CONTACT INFORMATION

The Reinforced Earth Company maintains full-service offices throughout the United States. Contact the office serving your state for technical assistance.

Location	States Serving	Phone Number
Aurora, CO (Denver) 3033 South Parker Rd., Suite 1100 Aurora, CO 80014	AK, CO, ID, KS, MT, ND, NE, OR, SD, WA, WY	(303) 790-1481
Aurora, IL (Chicago) 1444 North Farnsworth Ave., Suite 505 Aurora, IL 60505	IA, IL, IN, MN, MO, WI	(630) 898-3334
Mission Viejo, CA (Los Angeles) 25910 Acero, Suite 200 Mission Viejo, CA 92691	AZ, CA, HI, NV, UT	(949) 275-2723
North Richland Hills, TX (Dallas) 9001 Airport Freeway, Suite 800 North Richland Hills, TX 76180	AR, LA, NM, OK, TX	(817) 283-5503
Peachtree Corners, GA (Atlanta) 6625 The Corners Pkwy., Suite 450 Peachtree Corners, GA 30092	AL, GA, MS, SC, TN	(770) 242-9415
Raleigh, NC 9208 Falls of Neuse Rd., Suite 201 Raleigh, NC 27615	DC, DE, KY, MD, NC, VA, WV	(984) 275-2723
Sterling, VA (Washington, DC) 45610 Woodland Rd., Suite 200 Sterling, VA 20166	DC, DE, KY, MD, MI, NC, NJ, OH, PA, VA, WV	(703) 547-8797
	MA, ME, NH, NY, RI, VT	(978) 764-7315 (703) 547-8797
Winter Garden, FL (Orlando) 12200 West Colonial Dr., Suite 305 Winter Garden, FL 34787	FL	(407) 226-2840

NOTES

Corporate Headquarters
45610 Woodland Rd., Suite 200
Sterling, Virginia 20166

(703) 547-8797

www.reinforcedearth.com